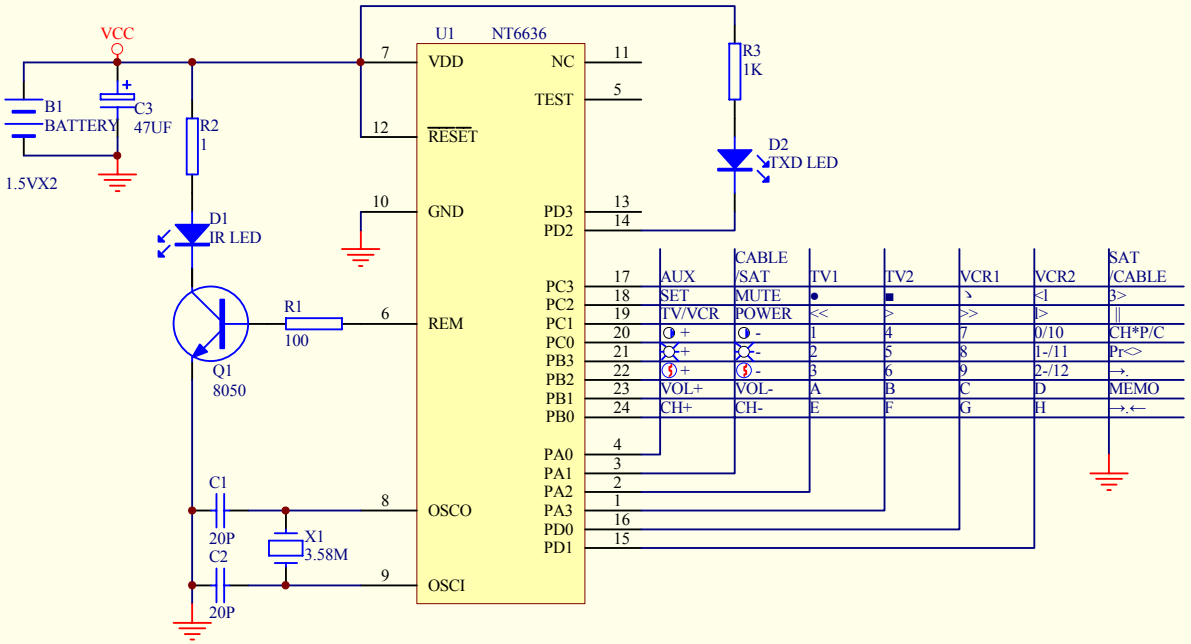

Title		
Size A4	Number	Revision
Date: 10-Oct-2004		Sheet of
File: D:\prog\..\电路图.sch		Drawn By: