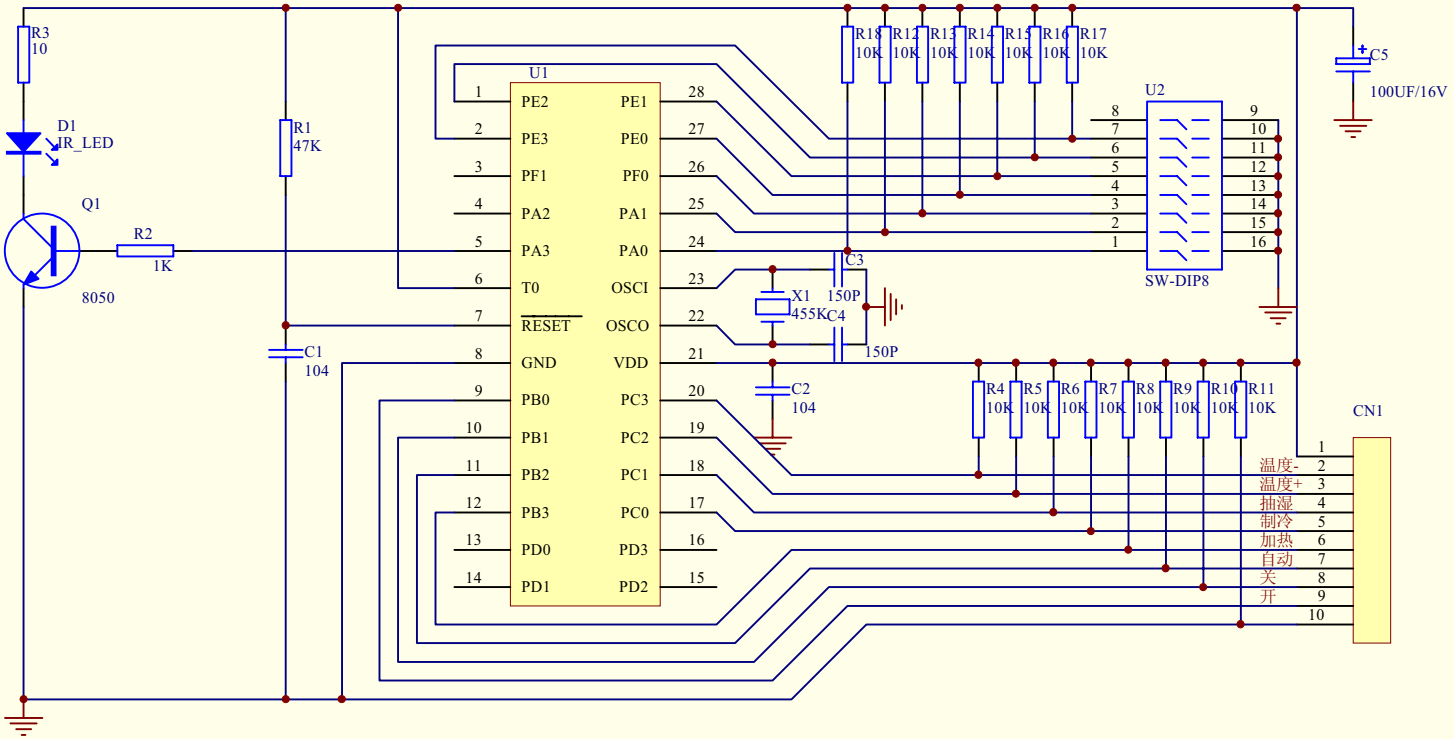

Title	远程监控--遥控器终端	
Size A4	Number	Revision 拔码开关
Date: 11-Mar-2003		Sheet of
File: I:\Home\..\远程监控终端-V20.Sch		Drawn By: