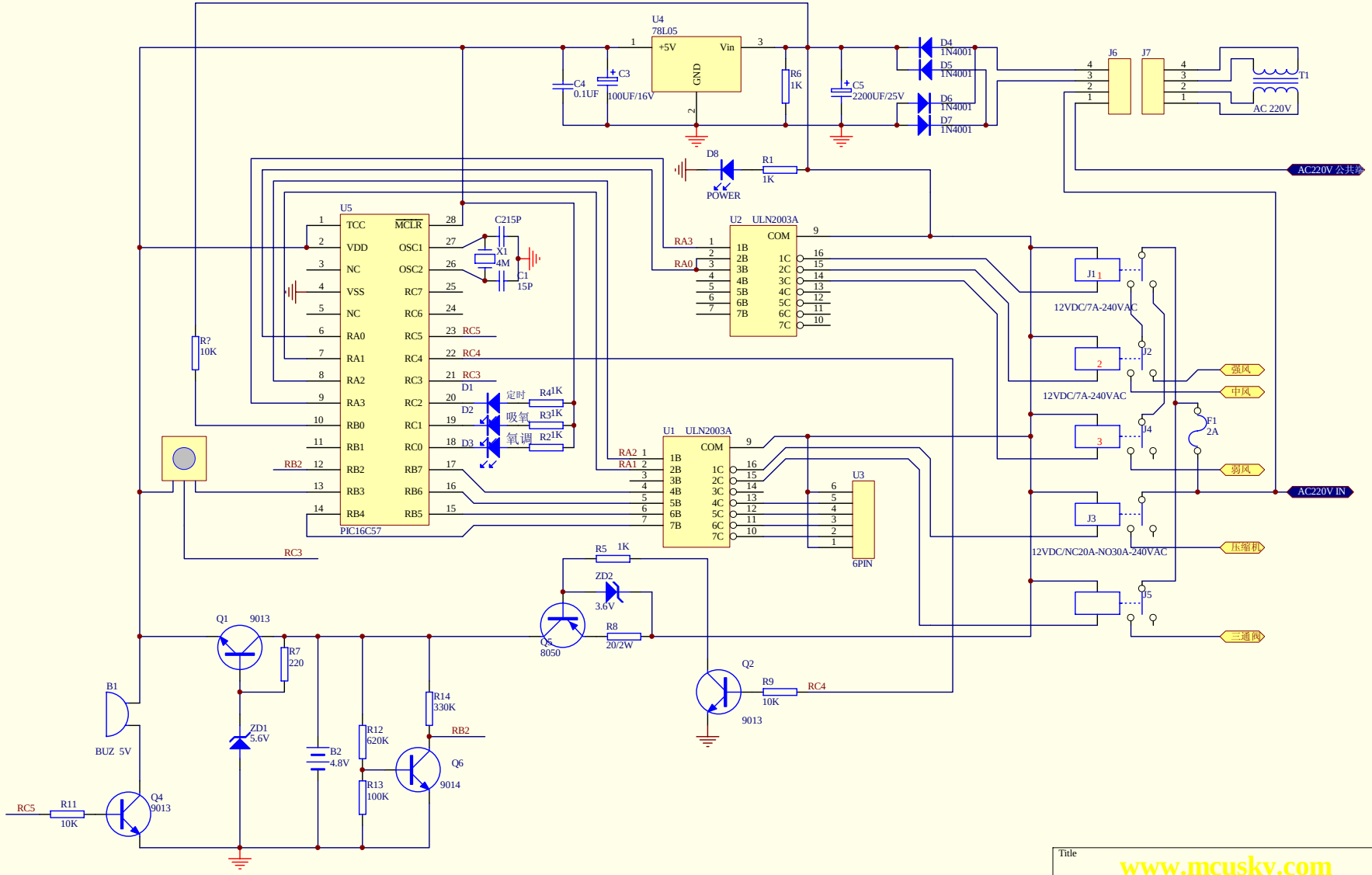

Title

www.mcusky.com

Size	Number	Revision
B		

Date:	10-Oct-2004	Sheet of	
File:	D:\prog\...\C0189.SCH	Drawn By:	