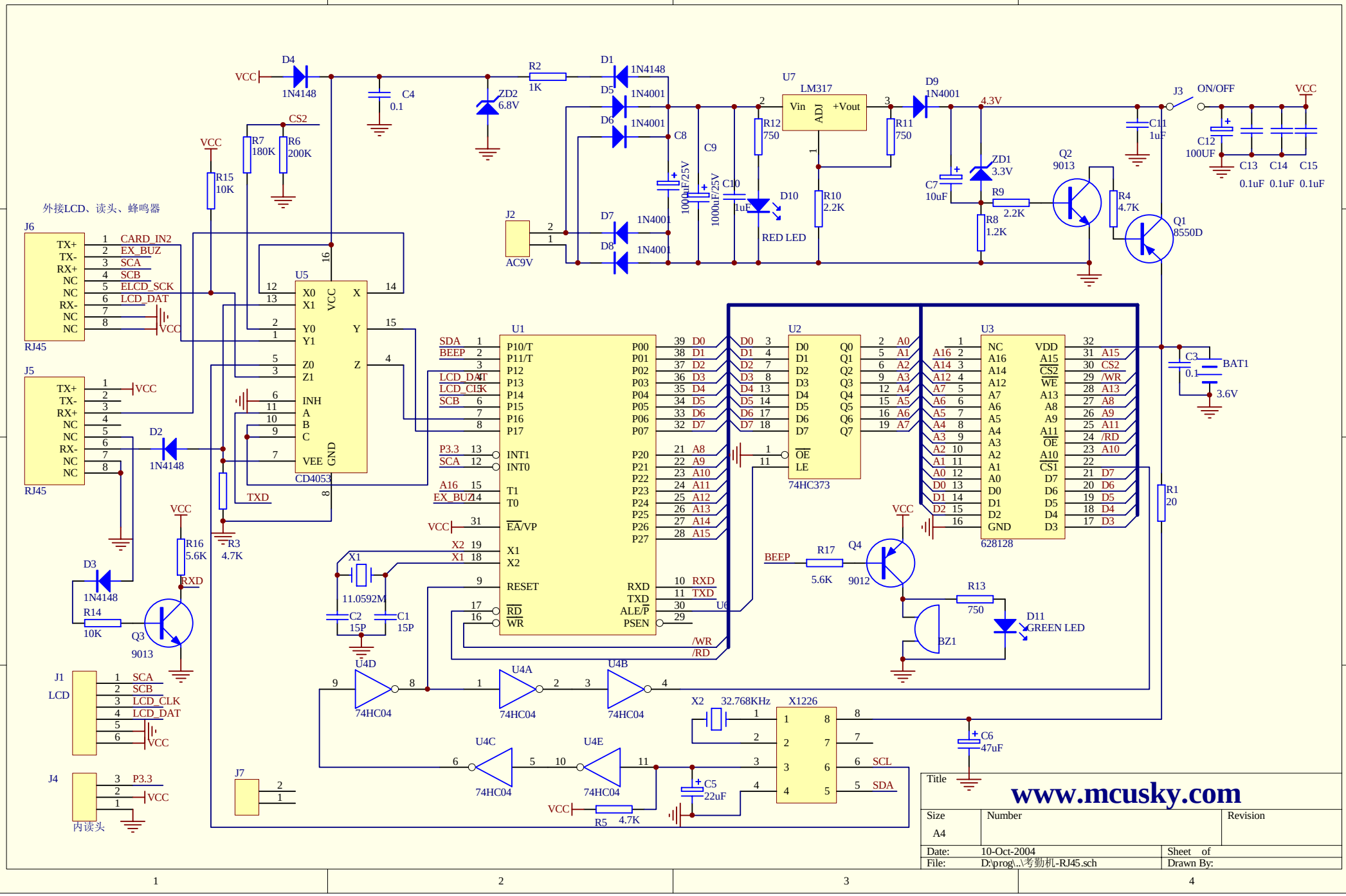
外接LCD、读头、蜂鸣器
J6
RJ45
J5
RJ45
J1
LCD
J4
内读头
J7
J2
AC9V
U5
CD4053
U1
U2
74HC373
U3
628128
U7
LM317
Vin
ADJ
+Vout
J3
ON/OFF
X1226
32.768KHz
11.0592M
U4D
U4A
U4B
U4C
U4E
74HC04
Q1
8550D
Q2
9013
Q3
9013
Q4
9012
BZ1
D11
GREEN LED
D10
RED LED
BAT1
3.6V
www.mcusky.com
Title
Size
A4
Number
Revision
Date: 10-Oct-2004
File: D:\prog\..\考勤机-RJ45.sch
Sheet of
Drawn By: