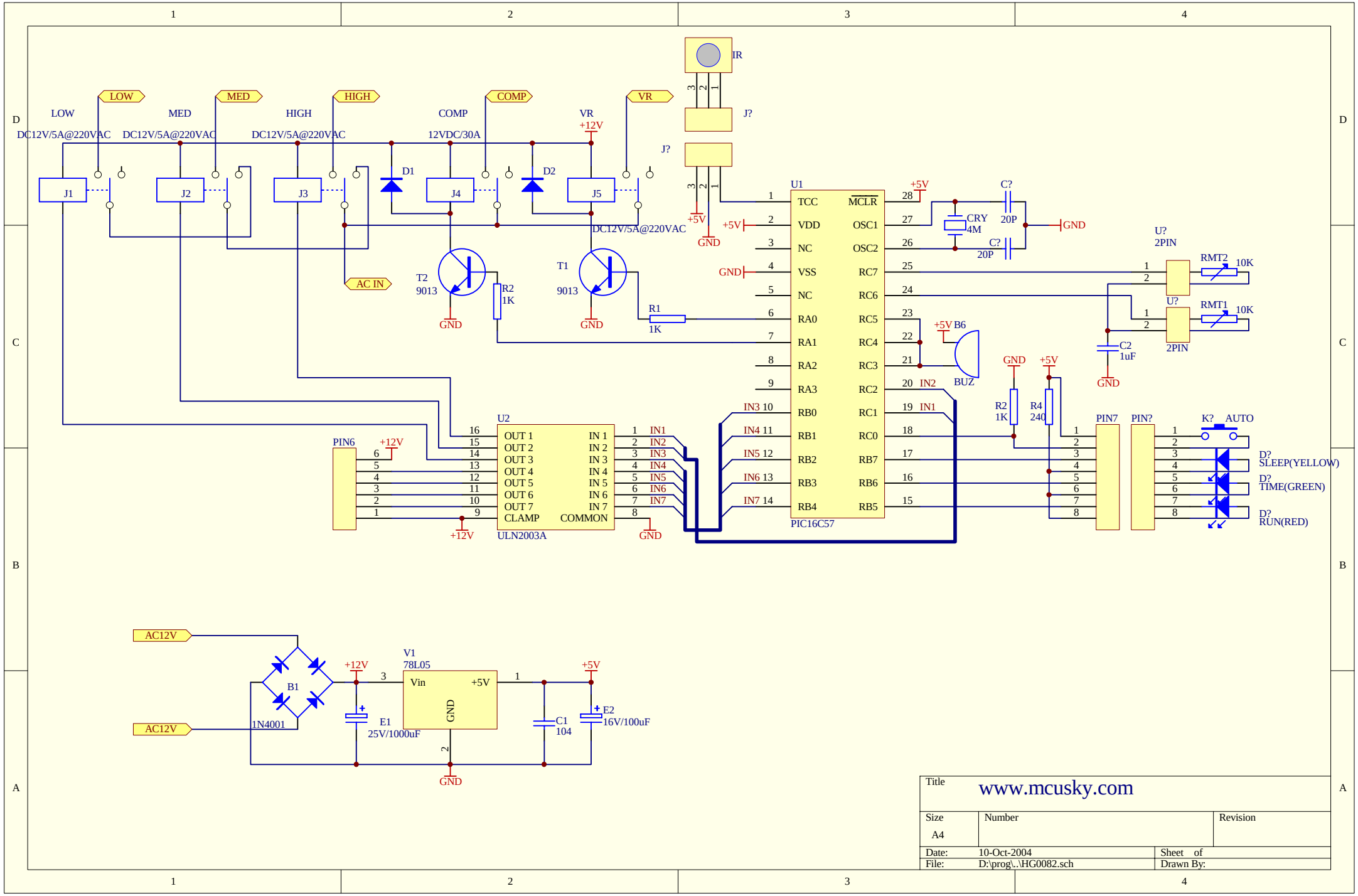

Title	www.mcusky.com	
Size A4	Number	Revision
Date: 10-Oct-2004		Sheet of
File: D:\prog\..\HG0082.sch		Drawn By: