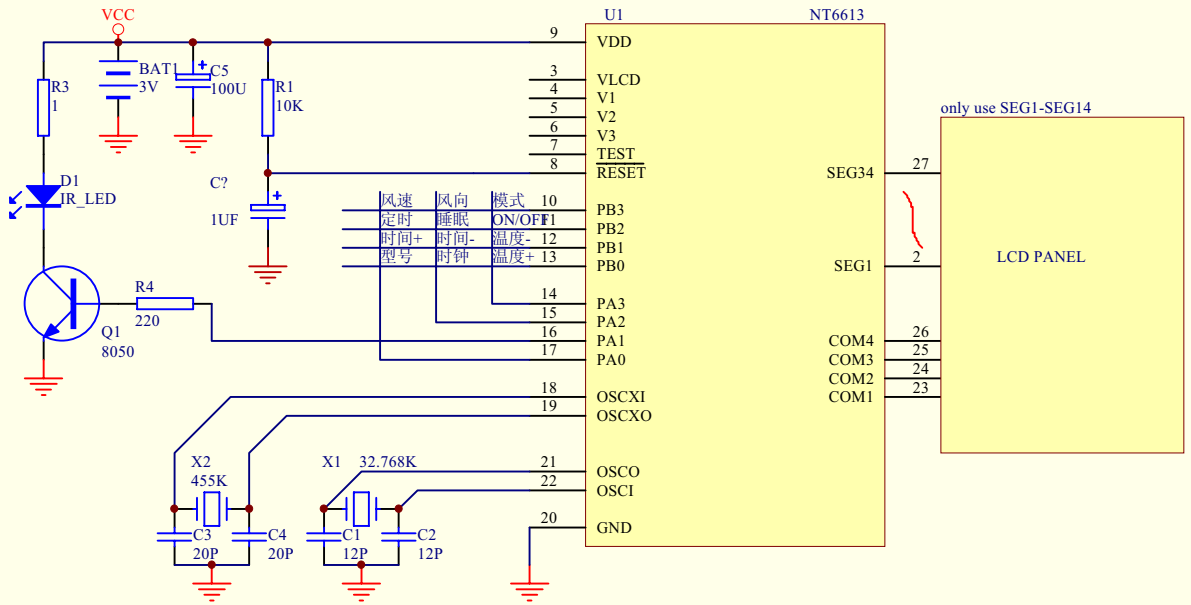

Title		
Size A4	Number	Revision
Date: 23-Oct-2001		Sheet of
File: D:\prog\..\C0090.Sch		Drawn By: