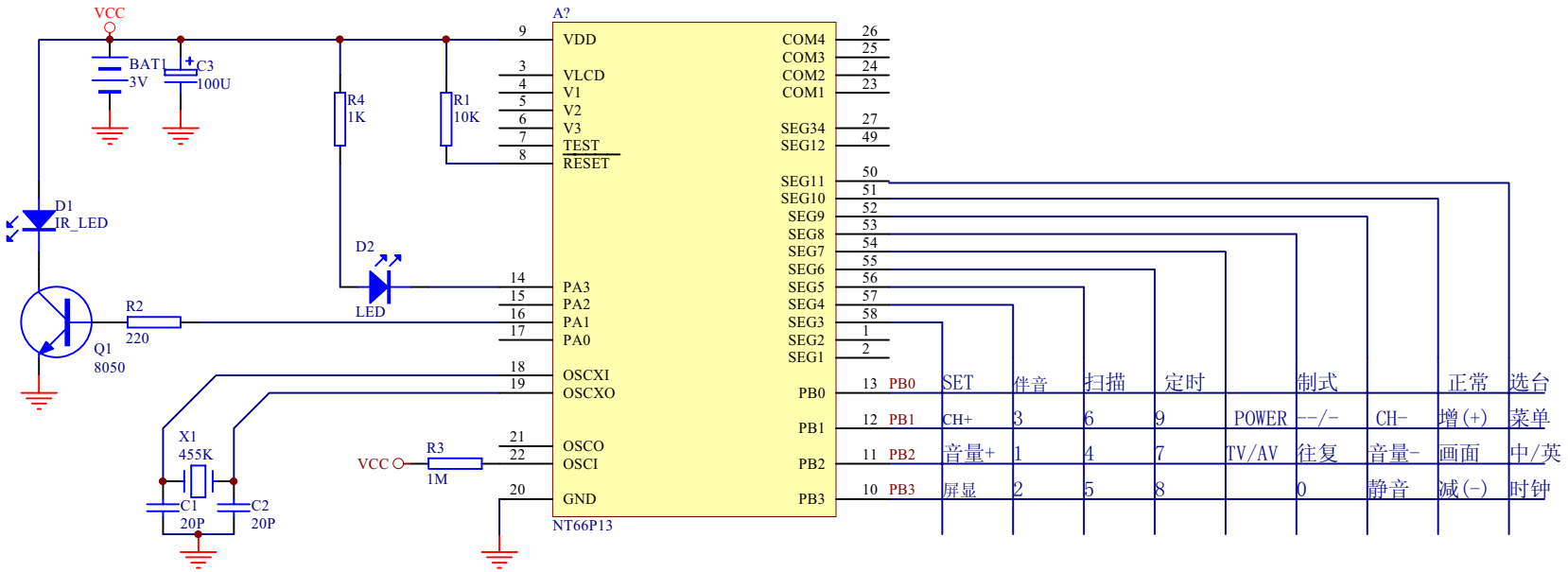

烧录脚：
VDD、TEST、OSCI、RES、PA3、PA2、PA1、GND

Title	LC 7461		
Size A4	Number		Revision
Date:	3-Apr-2003	Sheet of	
File:	J:\prog\..\P0151.SCH	Drawn By:	